

Price List 2026
CESentry

Connect people. Create access.

Special notes

1. Unless stated otherwise, the prices in this price list are given in euros per piece.
2. Prices are subject to change without notice. We reserve the right to invoice our products at current price.
3. With the publication of this price list, valid from 01.01.2026, all previous price lists become invalid.
4. The prices in this price list are recommended retail prices and do not include assembly.
5. The statutory Value Added Tax (VAT) shall be invoiced separately at prescribed rate.
6. CEStronics accepts no liabilities for errors including printing errors; Subject to technical changes without notice
7. Our current General Terms and Conditions (GTC) can be found at any time via the following link:
8. https://www.ces.eu/en_us/terms.html



WEEE-Reg.-Nr. DE 85643571

Contents

Special notes	2
The CESentry System	4
Electronic handle sets	6
Electronic cylinders	14
Electronic cylinder, Swiss profile	20
Electronic padlock	22
Electronic cam cylinder	22
Electronic round cylinders	23
Wallterminals	24
Programming	27
Electronic peripheral devices	29
Overview of licence models	34
CESentry Starter-Set	38
Tools	40
Electronic handle replacement parts	41
Electronic cylinder replacement parts	42
Special function	44
Extensions	46
Finishes	47
Knob shapes	48
Lever handle shapes	52
Services	53
Repairs	55

The CESentry System

CESentry is a cloud-based electronic locking system.
It consists of a user-friendly organisation system
combined with modern locking and access devices.

The system is set up and managed by means of the CESentry AdminApp or the CESentry web client. Access rights are managed and stored securely in the cloud. The locking devices can be operated either with a smartphone and the CESentry AccessApp or using RFID media.
The versatility of the 13.56 MHz RF ID technologies MIFARE and LEGIC offer high levels of security together with multi-application capabilities. Simple programming concepts that can be combined offer convenient and competitively priced options for customised solutions from private users to small and medium-sized company.





Electronic cylinders

Electronic cylinders are available in various versions and colours. A suitable solution is thus available for every door. The battery is located in the outside knob and can be replaced quickly and simply.



Electronic handle sets for external and internal doors

Suitable for both indoors and outdoors. This handle set is designed to be particularly slim and features a high-quality appearance. Available as a narrow or wide long shield and as a compact shield.



Wallterminals

Wall terminals are used for access control on automatic doors, sliding doors, revolving doors and barrier systems. With the Bluetooth® Low Energy function of the wall terminal, a smartphone can be used just like a remote control to open a garage door or barrier from within a vehicle, for example.

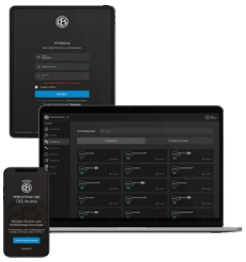

Managament

The AdminApp or web client let you issue authorisations to employees, visitors and service providers with ease. Thanks to an intuitive, cross-platform operating concept, you can make changes either in the AdminApp while on the move or using the web client on a PC or tablet.



Locking media

In addition to a smartphone, RFID media can also be used as an access medium as electronic key, ID card or key fob.



Starter set

A secure, flexible solution for the home or office

Electronic handle sets

Narrow shield



Narrow shield, stainless steel and black

CESentry EB11xx

- 13.56 MHz multi-ID system, LEGIC and MIFARE
- Bluetooth® Low Energy
- Narrow shield version
- Weatherproof version IP54, suitable for use on external doors
- Fire-resistant design, suitable for use on fire doors up to T120
- Suitable for use on doors compliant with EN 179
- Stainless steel on outside/inside, with L-shape lever handle (standard version FSB1076) both sides

Order example: EB11xx

Article number	HO Lever handle type outside	HI* Lever handle type inside	HD** Lever handle position	C Optional handle set finish	T Door thickness	CH Cylinder hole pat-tern	D Distance	SP Four square	ERSP Event storage	PTo Protection Type outside	PTi*** Protection Type inside
	See lever handle shapes	See lever handle shapes	L, R	0, B	35...184	PB, PO, PI	55...98	7...10	MITE, OERS	WR / FR	WR / FR
EB1120	FSB1070	FSB1070	L	0	55	PB	92	8	MITE	WR	FR

* Only for complementary long shield
** The lever handle position can be changed without special tools
*** Only for dual shield

L = Left, R = Right, 0 = Standard (Stainless steel), B = Black, PB = Cylinder hole both sides, PO = Cylinder hole outside, PI = Cylinder hole inside,
MITE = With event storage, OERS = Without event storage,
WR = Water resistant, FR = Fire resistant

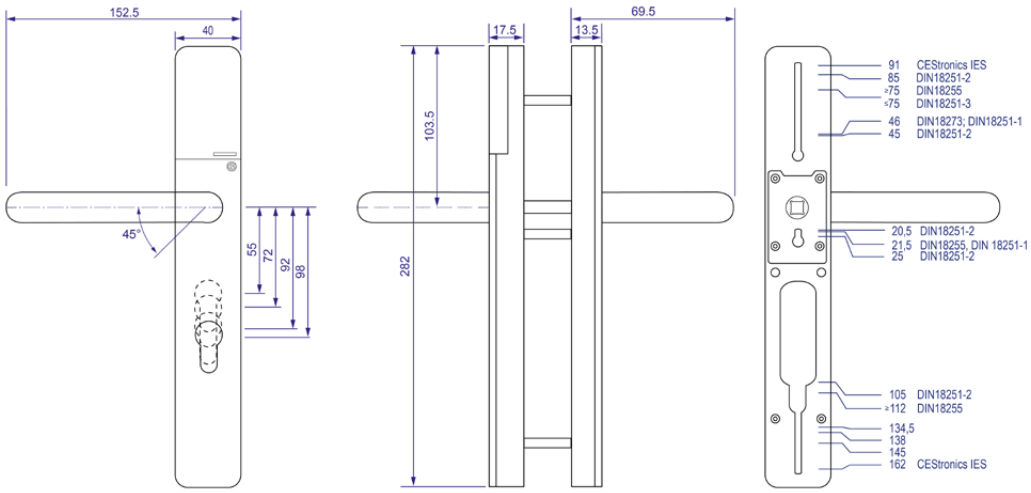

Electronic long shield handles



	Electronic long shield handles	
Article number	**Description/features**	**Price in €**
EB1110	**Electronic long shield** CESentry version, narrow shield on access and reverse sides, EURO design, ID technology LEGIC advant / MIFARE DESFire, with Bluetooth® Low Energy	580,00
EB1100	**Electronic long shield** CESentry version, narrow shield, access side only, for use on interior doors, EURO design, ID technology LEGIC advant / MIFARE DESFire, with Bluetooth® Low Energy	475,00
EB1120	**Electronic long shield** CESentry version, narrow shield on access side, wide shield on reverse side, EURO design, ID technology LEGIC advant / MIFARE DESFire, with Bluetooth® Low Energy	580,00
EB1130	**Electronic long shield** CESentry version, dual access control on both sides, narrow shield, EURO design, ID technology LEGIC advant / MIFARE DESFire, with Bluetooth® Low Energy	945,00

	For special finishes see page 49	
	For lever handle shapes see page 52	

Electronic long shield handles



	Electronic long shield handles	
Article number	**Description/features**	**Price in €**
EB1150	**Mechanical long shield one side fitting,** mechanical narrow shield, reverse side only, for use on interior doors, EURO design	115,00
EB1160	**Complementary long shield,** mechanical narrow shield on both sides, EURO design	235,00
EB1170	**Electronic long shield** CESentry version, narrow shield on access and reverse sides, EURO design, burglar-resistant to ES2, ID technology LEGIC advant / MIFARE DESFire, with Bluetooth® Low Energy	740,00
EB1171	**Electronic long shield** CESentry version, narrow shield on access and reverse sides, EURO design, burglar-resistant to SKG3 ID technology LEGIC advant / MIFARE DESFire, with Bluetooth® Low Energy	
EB1180	**Electronic long shield** CESentry version, narrow shield on access side, wide shield on reverse side, EURO design, burglar-resistant to ES2, ID technology LEGIC advant / MIFARE DESFire, with Bluetooth® Low Energy	740,00
EB1181	**Electronic long shield** CESentry version, narrow shield on access side, wide shield on reverse side, EURO design, burglar-resistant to SKG3 ID technology LEGIC advant / MIFARE DESFire, with Bluetooth® Low Energy	
–WR	**Weather-resistant version according to IP54**	25,00
–Legic	**Surcharge for LEGIC technology**	25,00

	For special finishes see page 49	
	For lever handle shapes see page 52	

Electronic handle sets

Wide shield



Wide shield, stainless steel and black

CESentry EB12xx

- 13.56 MHz multi-ID system, LEGIC and MIFARE
- Bluetooth® Low Energy
- Wide shield version
- Weatherproof version IP54, suitable for use on external doors
- Fire-resistant design, suitable for use on fire doors up to T120
- Suitable for use on doors compliant with EN 179
- Stainless steel on outside/inside, with L-shape lever handle (standard version FSB1076) both sides

Order example: EB12xx

Article number	HO Lever handle type outside	HI* Lever handle type inside	HD** Lever handle position	C Optional handle set finish	T Door thickness	CH Cylinder hole pat-tern	D Distance	SP Four square	ERSP Event storage	PTo Protection Type outside	PTi*** Protection Type inside
	See lever handle shapes	See lever handle shapes	L, R	0, B	35...184	PB, PO, PI	55...98	7...10	MITE, OERS	WR / FR	WR / FR
EB1120	FSB1070	FSB1070	L	0	55	PB	92	8	MITE	WR	FR

* Only for complementary long shield
** The lever handle position can be changed without special tools
*** Only for dual shield

L = Left, R = Right, 0 = Standard (Stainless steel), B = Black, PB = Cylinder hole both sides, PO = Cylinder hole outside, PI = Cylinder hole inside,
MITE = With event storage, OERS = Without event storage,
WR = Water resistant, FR = Fire resistant

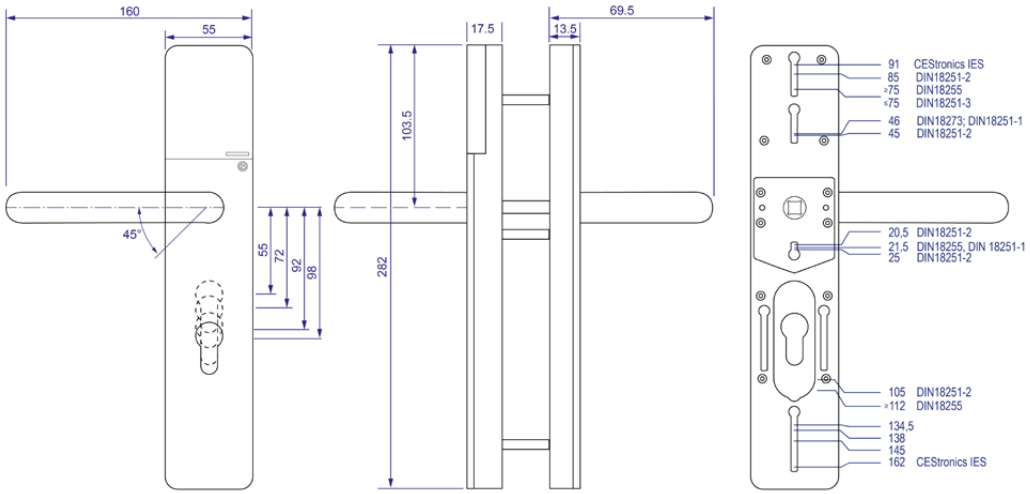

Electronic long shield handles



	Electronic long shield handles	
Article number	**Description/features**	**Price in €**
EB1220	**Electronic long shield** CESentry version, wide shield on access and reverse sides, EURO design, ID technology LEGIC advant / MIFARE DESFire, with Bluetooth® Low Energy	580,00
EB1200	**Electronic long shield** CESentry version, Wide shield, access side only, for use on interior doors, EURO design, ID technology LEGIC advant / MIFARE DESFire, with Bluetooth® Low Energy	475,00
EB1210	**Electronic long shield** CESentry version, wide shield on access side, narrow shield on reverse side, EURO design, ID technology LEGIC advant / MIFARE DESFire, with Bluetooth® Low Energy	580,00
EB1230	**Electronic long shield** CESentry version, dual access control on both sides, wide shield, EURO design, ID technology LEGIC advant / MIFARE DESFire, with Bluetooth® Low Energy	945,00

	For special finishes see page 49	
	For lever handle shapes see page 52	

Electronic long shield handles



	Electronic long shield handles	
Article number	**Description/features**	**Price in €**
EB1250	**Mechanical long shield one side fitting,** mechanical wide shield, reverse side only, for use on interior doors, EURO design	115,00
EB1260	**Complementary long shield,** mechanical wide shield on both sides, EURO design	235,00
EB1270	**Electronic long shield** CESentry version, wide shield on access and reverse sides, EURO design, burglar-resistant to ES2, ID technology LEGIC advant / MIFARE DESFire, with Bluetooth® Low Energy	740,00
EB1280	**Electronic long shield** CESentry version, wide shield on access side, narrow shield on reverse side, EURO design, burglar-resistant to ES2, ID technology LEGIC advant / MIFARE DESFire, with Bluetooth® Low Energy	740,00
–WR	**Weather-resistant version according to IP54**	25,00
–Legic	**Surcharge for LEGIC technology**	25,00

	For special finishes see page 49	
	For lever handle shapes see page 52	

Electronic handle sets

Compact-Shield



Compact-Shield stainless steel and black

CESentry EB32xx

- Multi-ID-System 13,56 MHz, LEGIC and MIFARE
- Bluetooth® Low Energy
- Programmable via Desktop-Writer
- Suitable for use on internal doors
- Stainless steel on outside/inside, with L-shape lever
- handle (standard version FSB1076) both sides

Order example: EB32xx

Article number	HO Lever handle type outside	HI* Lever handle type inside	HD** Lever handle position	CR Optional reader finish	C Optional handle set finish	T Door thickness	SP four square	ERSP event storage
	See lever handle shapes	See lever handle shapes	L, R	0, W	0, B	35...184	7...10	MITE, OERS
EB3220	FSB1070	FSB1070	L	0	B	55	8	MITE

* Only for complementary long shield

** The lever handle position can be changed without special tools

L = Left, R = Right, 0 = Standard (Stainless steel), B = Black, PB = Cylinder hole both sides, PO = Cylinder hole outside, PI = Cylinder hole inside,
MITE = With event storage, OERS = Without event storage

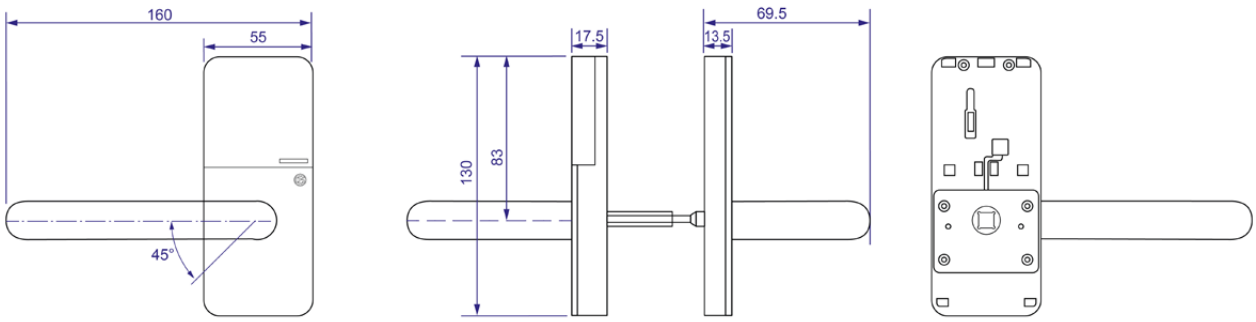

Compact electronic handle sets



	Compact electronic handle sets	
Article number	**Description/features**	**Price in €**
EB3220	**Electronic compact shield** CESentry version, access and reverse sides, for use on interior doors, ID technology LEGIC advant / MIFARE DESFire, with Bluetooth® Low Energy	530,00
EB3200	**Electronic compact shield** CESentry version, access side only, for use on interior doors, ID technology LEGIC advant / MIFARE DESFire, with Bluetooth® Low Energy	470,00
EB3230	**Electronic compact shield** CESentry version, dual access control on both sides, for use on interior doors, ID technology LEGIC advant / MIFARE DESFire, with Bluetooth® Low Energy	935,00
EB3250	**Mechanical compact shield one side fitting** mechanical reverse side only, for use on interior doors	105,00
EB3260	**Complementary compact shield** mechanical on both sides, for use on interior doors	210,00
EB3290	**Electronic cylinder rosette** both sides, prepared for Euro profile cylinders	30,00
–Legic	**Surcharge for LEGIC technology**	25,00

	For special finishes see page 49	
	For lever handle shapes see page 52	

Electronic cylinders

MIFARE or LEGIC ID system

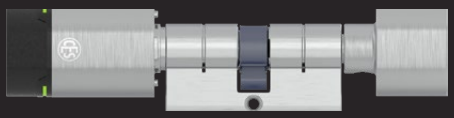

EB815

Double knob cylinder

- For single-side identification with electronic locking media
- Optical red/green display
- Acoustic indications via integral beeper
- Locking on outer side using authorised locking medium only, permanently locking on inner side by means of mechanical knob
- Fire-resistant design, suitable for use on fire doors up to T120
- Basic length: 30.5 mm / 30.5 mm (knob/locking side)
- Finish: stainless steel, black
- Supplied with battery for operation and special fixing screw

---

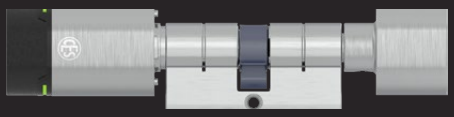

EB815/AP

Double-knob anti-panic cylinder

Product description as for EB815, but differing as follows:

- Integrated anti-panic module for automatic resetting of the locking cam
- Defined locking cam position.
  (This electronic cylinder may only be used in locks for which approval for the electronic cylinder is provided)
- Basic length: 30.5 mm / 30.5 mm (knob/locking side)

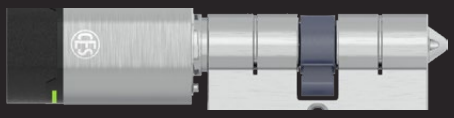

EB802

Dummy cylinder

Product description as for EB815, but differing as follows:

- Inner side blank, without function or with profile insert

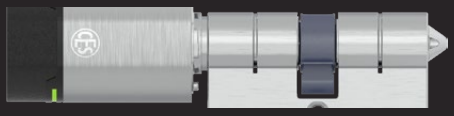

EB802/AP

Anti-panic dummy cylinder

Product description as for EB815/AP, but differing as follows:

- Inner side blank, without function or with profile insert

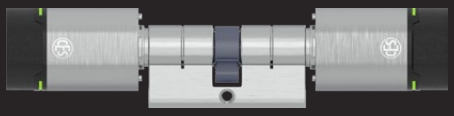

EB8710

Dual cylinder

Product description as for EB815, but differing as follows:

- For identification on both sides with electronic locking media
- Locking on both outer and inner sides using authorised locking medium only
- Independent authorisation control on both sides

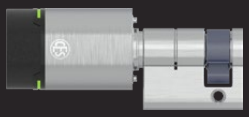

EB851

Half cylinder

Product description as for EB815, but differing as follows:

- Half cylinder with electronic knob on outer side
- Locking on outer side using authorised locking medium only
- Basic length: 30.5 mm (locking side)



EB615

Double knob cylinder
- Swiss profile
- For single-side identification with electronic locking media
- Optical red/green display
- Acoustic indications via integral beeper
- Locking on outer side using authorised locking medium only, permanently locking on inner side by means of mechanical knob
- Basic length: 30.5 mm / 30.5 mm (knob/locking side)
- Finish: stainless steel, black
- Supplied with battery for operation and special fixing screw

---

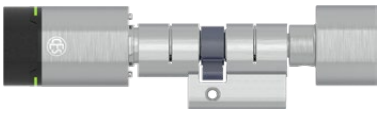

EB615/AP

Double-knob anti-panic cylinder
Product description as for EB615, but differing as follows:
- Integrated anti-panic module for automatic resetting of the locking cam
- Defined locking cam position
  (This electronic cylinder may only be used in locks for which approval for the electronic cylinder is provided)

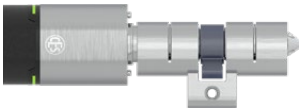

EB602

Dummy cylinder
Product description as for EB615, but differing as follows:
Inner side blank, without function or with profile insert

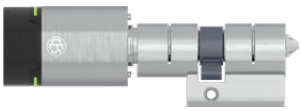

EB602/AP

Anti-panic dummy cylinder
Product description as for EB615, but differing as follows:
- Inner side blank, without function or with profile insert

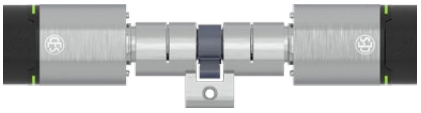

EB6710

Dual cylinder
Product description as for EB615, but differing as follows:
- For identification on both sides with electronic locking media
- Locking on both outer and inner sides using authorised locking medium only
- Independent authorisation control on both sides



EB651

Half cylinder
Product description as for EB615, but differing as follows:
- Half cylinder with electronic knob on outer side
- Locking on outer side using authorised locking medium only
- Basic length: 30.5 mm (locking side)



Padlock

- For identification with electronic locking media
- With comfort function
- Optical red/green display
- Acoustic indications via integral beeper
- Locking on outer side using authorised locking medium only
- Supplied with battery for operation

EB215

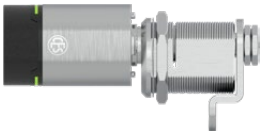

Cam cylinder

- For identification with electronic locking media
- Optical red/green display
- Acoustic indications via integral beeper
- Locking on outer side using authorised locking medium only
- 90° swivel range
- Finish: stainless steel, black
- Supplied with battery for operation

EB5558



Round cylinder

- For identification with electronic locking media
- Optical red/green display
- Acoustic indications via integral beeper
- Locking on outer side using authorised locking medium only
- Finish: stainless steel, black
- Supplied with battery for operation

EB30

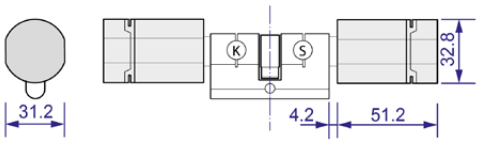

Double cylinder extensions

Double cylinder														
Innenseite (K) / Maße in mm								Outside (S) / dimensions in mm						
	90,5	...	65,5	...	40,5	35,5	30,5	30,5	35,5	40,5	...	65,5	...	90,5
Maximum axial dimension 90.5 mm, extension in 5 mm steps								Maximum axial dimension 90.5 mm, extension in 5 mm steps						

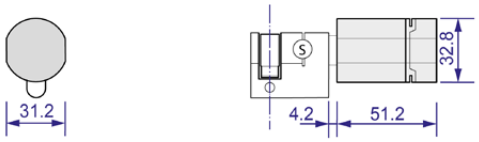

Single cylinder extensions

Single cylinder														
								Outside (S) / dimensions in mm						
								30,5	35,5	40,5	...	65,5	...	90,5
								Maximum axial dimension 90.5 mm, extension in 5 mm steps						

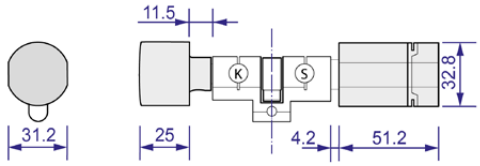

Double cylinder extensions - Swiss profile

Double cylinder														
Inside (K) / dimensions in mm								Outside (S) / dimensions in mm						
	90,5	...	65,5	...	40,5	35,5	30,5	30,5	35,5	40,5	...	65,5	...	90,5
Maximum axial dimension 90.5 mm, extension in 5 mm steps								Maximum axial dimension 90.5 mm, extension in 5 mm steps						

Ordering example for electronic cylinder						
Article number	Length (K) inside	Length (S) outside	Housing finish	Reader finish	Knob shape	Event storage
EB815	30,5	40,5	MPCR	O,W	CT	MITE, OERS

Electronic cylinders



	Electronic cylinders	
Article number	**Description/features**	**Price in €**
EB815	**Electronic double knob cylinder** CESentry version, reading on one side, EURO profile, ID technology LEGIC advant / MIFARE DESFire, with Bluetooth® Low Energy	435,00
EB851	**Electronic half cylinder** CESentry version, reading on external side only, EURO profile, ID technology LEGIC advant / MIFARE DESFire, with Bluetooth® Low Energy	435,00
EB8710	**Electronic dual cylinder** CESentry version, reading on both sides, EURO profile, ID technology LEGIC advant / MIFARE DESFire, with Bluetooth® Low Energy	600,00
EB802	**Electronic dummy cylinder** CESentry version, reading on one side, with dummy side, EURO profile, ID technology LEGIC advant / MIFARE DESFire, with Bluetooth® Low Energy	435,00

	For special versions see page 44	
	For length table see page 46	
	For special finishes see page 49	
	For knob shapes see page 48	

Electronic anti-panic cylinder



	Electronic anti-panic cylinder	
Article number	**Description/features**	**Price in €**
EB815/AP	**Electronic anti-panic cylinder** CESentry version, reading on one side, anti-panic features, EURO profile, ID technology LEGIC advant / MIFARE DESFire, with Bluetooth® Low Energy	545,00
EB802/AP	**Electronic anti-panic dummy cylinder** CESentry version, reading on one side, with dummy side, anti-panic features, EURO profile, ID technology LEGIC advant / MIFARE DESFire, with Bluetooth® Low Energy	545,00
–Legic	**Surcharge for LEGIC technology**	25,00

	For special versions see page 44	
	For length table see page 46	
	For special finishes see page 49	
	For knob shapes see page 48	

Electronic cylinder, Swiss profile



	Electronic cylinders	
Article number	**Description/features**	**Price in €**
EB615	**Electronic double knob cylinder** CESentry version, reading on one side, Swiss profile, ID technology LEGIC advant / MIFARE DESFire, with Bluetooth® Low Energy	490,00
EB651	**Electronic half cylinder** CESentry version, reading on external side only, Swiss profile, ID technology LEGIC advant / MIFARE DESFire, with Bluetooth® Low Energy	490,00
EB6710	**Electronic dual cylinder** CESentry version, reading on both sides, Swiss profile, ID technology LEGIC advant / MIFARE DESFire, with Bluetooth® Low Energy	655,00
EB602	**Electronic dummy cylinder** CESentry version, reading on one side, with dummy side, Swiss profile, ID technology LEGIC advant / MIFARE DESFire, with Bluetooth® Low Energy	490,00
EB610	**Electronic hybrid cylinder** CESentry version, reading on one side, with mechanical locking side Swiss profile, ID technology LEGIC advant / MIFARE DESFire, with Bluetooth® Low Energy	595,00

	For special versions see page 44	
	For length table see page 46	
	For special finishes see page 49	
	For knob shapes see page 48	

Electronic anti-panic cylinder



	Electronic anti-panic cylinder	
Article number	**Description/features**	**Price in €**
EB615/AP	**Electronic anti-panic cylinder** CESentry version, reading on one side, anti-panic features, Swiss profile, ID technology LEGIC advant / MIFARE DESFire, with Bluetooth® Low Energy	645,00
EB602/AP	**Electronic anti-panic dummy cylinder** CESentry version, reading on one side, with dummy side, anti-panic features, Swiss profile, ID technology LEGIC advant / MIFARE DESFire, with Bluetooth® Low Energy	600,00
–Legic	**Surcharge for LEGIC technology**	25,00

	For special versions see page 44	
	For length table see page 46	
	For special finishes see page 49	
	For knob shapes see page 48	

Electronic padlock



	Electronic padlock	
Article number	**Description/features**	**Price in €**
EB215	**Electronic padlock** CESentry version, with comfort function, ID technology LEGIC advant / MIFARE DESFire, with Bluetooth® Low Energy	545,00

Electronic cam cylinder



	Electronic cam cylinder	
Article number	**Description/features**	**Price in €**
EB5558	**Electronic cam cylinder** CESentry version, 90° swivel range, lever available in various versions ID technology LEGIC advant / MIFARE DESFire, with Bluetooth® Low Energy	525,00

For special finishes see page 49

Electronic round cylinders



	Electronic round cylinders	
Article number	**Description/features**	**Price in €**
EB27	**Electronic rim cylinder** CESentry version, for case locks, ID technology LEGIC advant / MIFARE DESFire, with Bluetooth® Low Energy	525,00
EB30	**Electronic rim cylinder** CESentry version, ID technology LEGIC advant / MIFARE DESFire, with Bluetooth® Low Energy	525,00
–Legic	**Surcharge for LEGIC technology**	25,00

Wallterminals

EBWT-I / EBWT-II



Wallterminals

Wall terminals are used for access control on automatic doors, sliding doors, revolving doors and barrier systems. With the Bluetooth® Low Energy function of the wall terminal, a smartphone can be used just like a remote control to open a garagedoor or barrier from within a vehicle, for example.

- Flush-mounted and surface-mounted versions
- Can be used in housings from different switch ranges or door communication modules
- Remote control thanks to Bluetooth® Low Energy function
- Sabotage protection

Article number	Housing I (outside)	Housing II (Inside)	CR Opt. coloring reader	C Opt. coloring housing	ERSP event storage
	see housing variants	see housing variants	0,W	0,B	MITE,OERS
EBWT-II	IP-55-AP	CES Standard	0	B	MITE

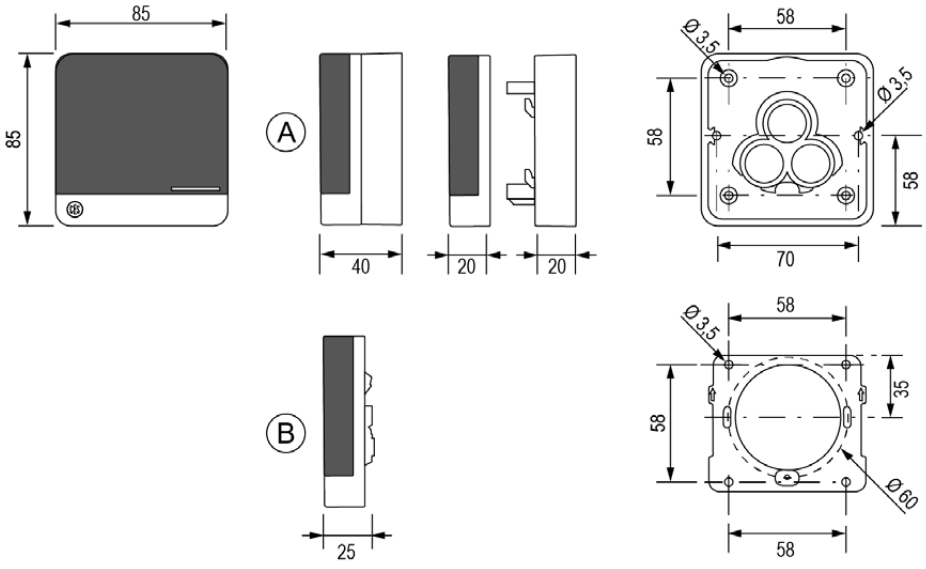

Electronic wall terminal

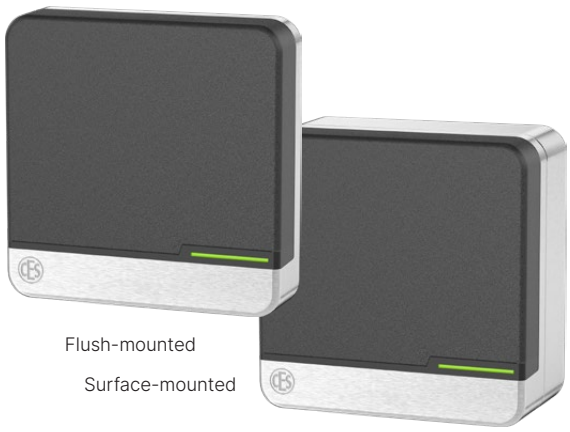

Flush-mounted

Surface-mounted

	Electronic wall terminal	
Article number	**Description/features**	**Price in €**
EBWT-I	**Wall terminal** CESentry version, compact design, without housing, for mounting on existing 60 mm switch boxes, ID technology LEGIC advant / MIFARE DESFire, with Bluetooth® Low Energy	425,00
EBWT-II	**Wall terminal** CESentry version, consisting of reader and controller, for security applications, reading on external side, without housing, for mounting on existing 60 mm switch boxes ID technology LEGIC advant / MIFARE DESFire, with Bluetooth® Low Energy	590,00
	Wall terminal housings	
Standard flush-mounted	**CES design housing** Cover with metal frame including fixing screw Flush-mount version Black or white	no extra charge
Standard surface-mounted	**CES design housing** Cover with metal frame including fixing screw and surface-mount frame Weatherproof surface-mount version, IP55 Black or white	45,00
	Options	
247724V	**Power supply unit for WT wall terminals** Power supply unit for top hat rail assembly in secured spaces 230V AC / 12 V DC (max. 800 mA) Suitable for connection to additional consumers (e.g. electric strike) Finish: Light grey	95,00



	Housings for door intercom systems	
Article number	Description/features	Price in €
Siedle Vario	**Siedle Vario housing, silver metallic for WT** (RAL 9006)	125,00
	Alternative Siedle Vario finishes	
	Dark grey mica (DB703)	140,00
	White (RAL 9016)	140,00
	Anthracite grey (RAL 7016) / Basalt grey (RAL 7012) / Grey aluminium (RAL 9007)	160,00
	Other colours and special finishes available, please specify RAL number and colour	
Telecom-Behnke	**WT with Telecom Behnke cover in 'Series 20' design**	15,00
	Housings for switch ranges	
WT-G	**GIRA: S 55, pure white, gloss, other colours on request**	95,00
WT-G	**GIRA: Surface switch series, pure white, gloss**	95,00
	TX44, all Gira colours	115,00
	Busch-Jäger: Future Linear/ Solo/ Carat/ Axcent, studio white, gloss	95,00
	Merten: M, polar white high gloss, other colours on request	95,00
	Jung AS500/ A594-0 WW/ CD 500 / alpine white	95,00

Programming

Offline

Programming with web client or AdminApp
via smartphone, tablet or PC

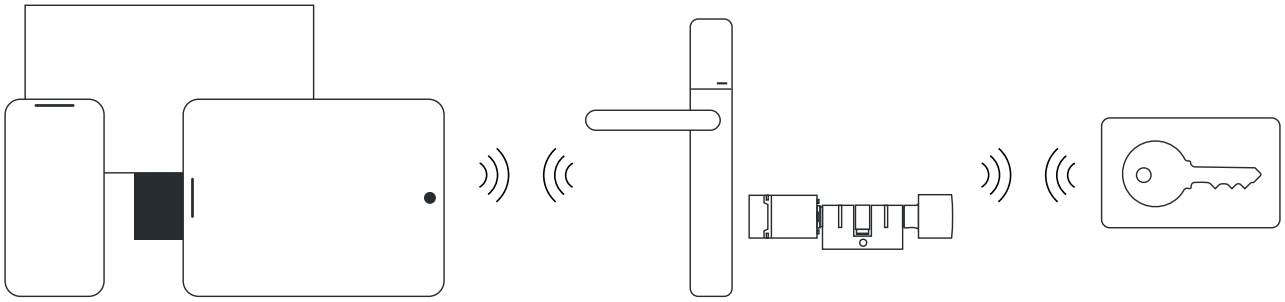



Desktop-Writer



Desktop-Writer

The Desktop Writer is a convenient and easy way to program locking devices and locking media.

The access authorizations are transferred to the locking devices and the locking media are registered in the web client.

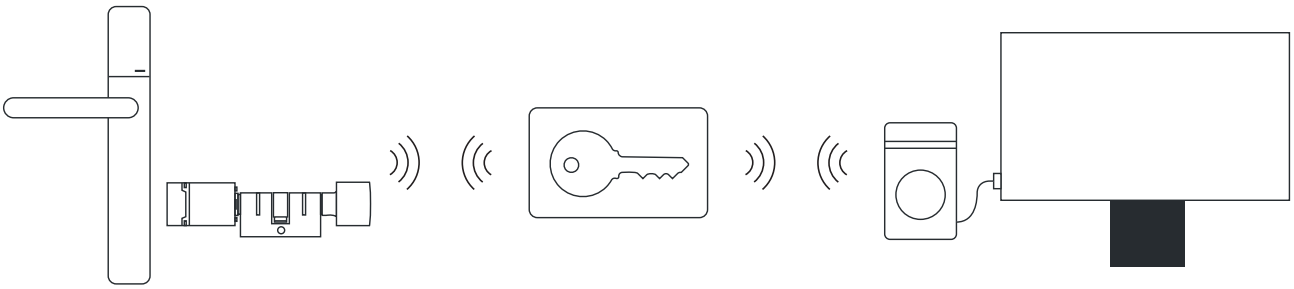

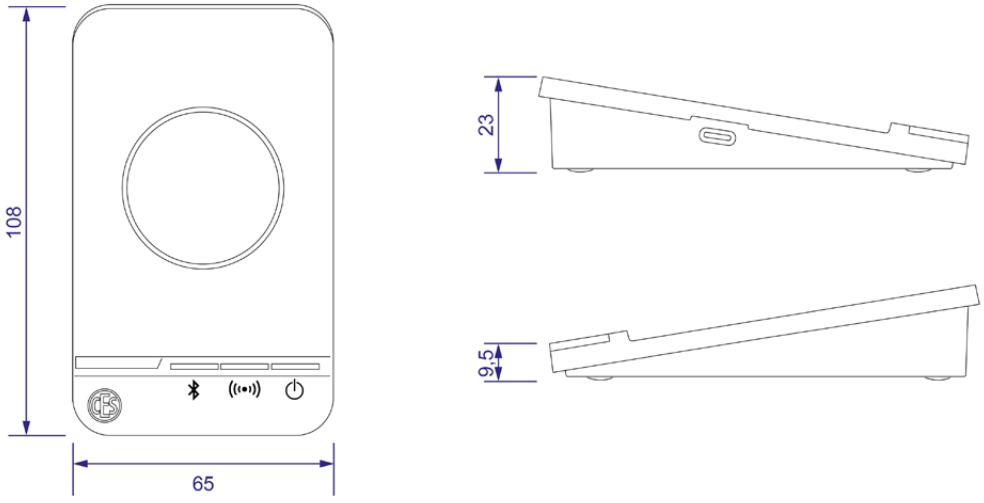

Gateway



Gateway

The gateway connects CESentry locking devices online to the CES backend.

Access authorizations, configurations and firmware updates are transferred automatically, without manual intervention on site.

Events and status information are available in real time in the web client.

If a gateway fails, another gateway within range automatically takes over.

CESentry Gateway – schematic diagram

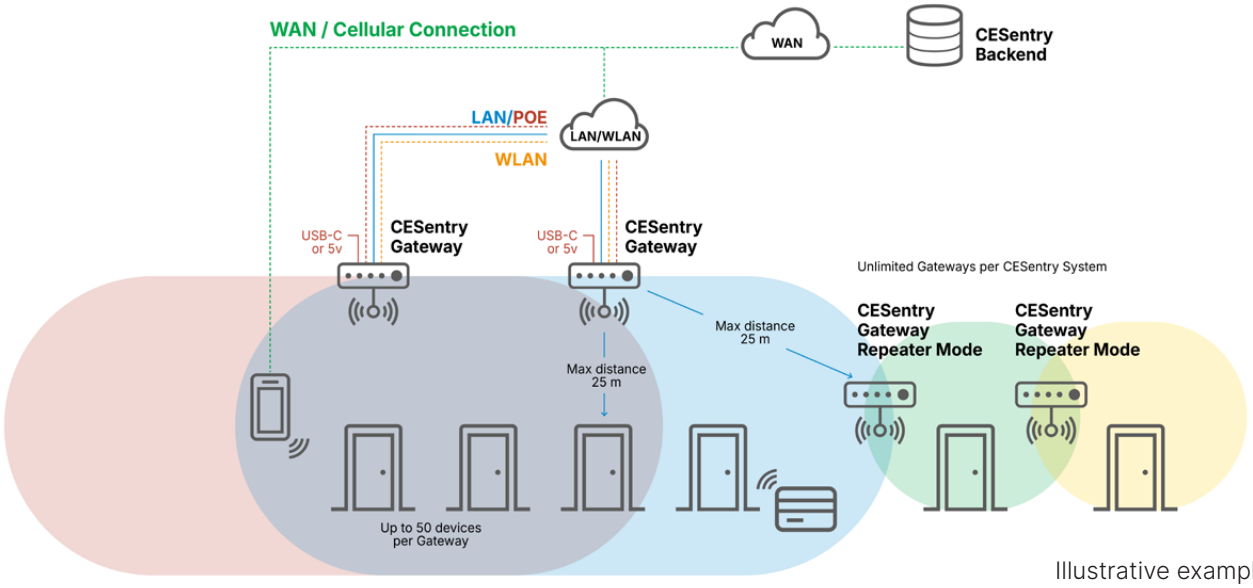

Illustrative example

Electronic peripheral devices

	Electronic peripheral devices	
Article number	**Description/features**	**Price in €**
345060	**Desktop-Writer** CESentry version, for reading and writing to RFID media, programming of CESentry locking devices, LEGIC and MIFARE, with Bluetooth® Low Energy	445,00
348133V	**Key Transport Card in accordance with the OSS standard** for transferring system-specific key material in accordance with the BSI guideline and the OSS standard	30,00
345061	**Gateway** CESentry version, for online connection of CESentry locking devices, for communication between locking devices and external systems, ID technology MIFARE DESFire, with Bluetooth® Low Energy	395,00

Locking media

CESentry is compatible to LEGIC and MIFARE 13,56 MHz-RFID-Systems.

In addition to a smartphone, RFID media can also be used as an access medium.

- CES electronic key (in combination with mechanical locking systems)
- ID card in ISO format
- Key fob



Electronic key



ID card in ISO format



Key fob



SlimLine Key fob

Media





	Media	
Article number	**Description/features**	**Price in €**
342545V	**DESFire ID card** neutral white, incl. marking with sequential numbering, 1 PU = 10 pieces	50,00
342237V	**LEGIC advant ID card** ATC4096-MP transponder version neutral white, incl. marking with sequential numbering, 1 PU = 5 pieces	50,00
342541V	**Premium MIFARE DESFire key fob** choice of colours, with stainless steel shackle incl. marking with sequential numbering, 1 PU = 5 pieces	100,00
342580V	**Premium LEGIC advant key fob** ATC4096-MP311 choice of colours, with stainless steel shackle, incl. marking with sequential numbering, 1 PU = 5 pieces	100,00
342540V	**SlimLine key fob DESFire EV3** Transponder: DESFire EV3 8k including serial number for identification 1 PU = 5 pieces Colours: Black, red, green, blue yellow and white	55,00
342356V	**LEGIC advant key fob** ATC4096-MP311 selection of colours, incl. marking with sequential numbering, 1 PU = 5 pieces	55,00

Media



	Media	
Article number	**Description/features**	**Price in €**
ESM-C	**CES MIFARE DESFire electronic key** locking medium: EV2 8k, selection of colours includes marking with sequential numbering	45,00
ESL-C	**CES LEGIC advant electronic key** locking medium: ATC 4096, selection of colours includes marking with sequential numbering	45,00
342559V	**CES electronic MIFARE DESFire locking medium clip EV2 8k** for retrofitting to CES key head, selection of colours, incl. marking with sequential numbering, 1 PU = 5 pieces	150,00
342561V	**CES electronic LEGIC advant ATC 4096 locking medium clip** for retrofitting to CES key head, selection of colours, incl. marking with sequential numbering, 1 PU = 5 pieces	150,00

Electronic Emergency-Key



	Electronic Emergency-Key	
Article number	**Description/features**	**Price in €**
345900V	**Emergency-Key** CES key fob for unlimited permanent unlocking in an emergency, ID technology MIFARE DESFire	30,00
345901V	**Emergency-Key** CES key for unlimited permanent unlocking in an emergency, ID technology MIFARE DESFire	65,00
345902V	**Emergency-Key** CES electronic locking medium clip for unlimited permanent unlocking in an emergency, ID technology MIFARE DESFire	40,00

Overview of licence models

CES offers different solutions for different target groups:
- CESentry Basic for home use and micro-sized businesses
- CESentry Business for small and medium-sized enterprises (SMEs)

	CESentry Basic for small systems with a maximum of 40 IDs*	**CESentry Business** for small and medium-sized enterprises with systems with up to 1000 IDs*
Number of IDs*	20 (standard)	100 (standard)
Type of IDs*	1 ID = 1 locking medium / mobile device / locking device	
Upgrade option (incurs a charge)	+20 IDs or upgrade to Business	+100 to max. 2000
Administration	Web client, AdminApp (iOS and Android)	
Locking media	Mobile device (Smartphone with app), RFID media	
Time models		
Period	√	√
Updated	√	√
Point in time	–	√
Repeating	–	√
Day list	–	√
Block mode	–	√
Release mode	–	√
Office function	–	√
Parameter group	–	√
Locking device groups	–	√
Person groups	–	√
Licence term	Unlimited	36 months
Restrictions after expiry of licence	The system can be viewed but can no longer be changed. Exceptions: In the event of a 'key loss', authorisations can continue to be blocked to ensure security at the doors. NOTE: Locking authorisations are retained and the function of opening the door is thus also maintained.	

* One locking medium / mobile device or one locking device corresponds to one ID.
** The upgrade can be purchased in future via the AdminApp and the CES Webshop / Online Shop.

	Licences	
Article number	**Description/features**	**Price in €**
345950	**CESentry Basic licence** Licence for the administration of 1 CESentry master key system with up to 20 IDs. This licence allows use of the CES admin and access app free of charge.	**0,00**
345951	**Extension for Basic licence** One-time extension of CESentry Basic licence by a further 20 IDs	**99,00**
345953	**Licence upgrade from Basic to Business** Upgrades CESentry Basic to CESentry Business licence	**495,00**
	The CESentry Basic licence has an unlimited validity and can be converted to the CESentry Business licence by means of an upgrade. *Following the upgrade, the conditions of the CESentry Business licence apply.*	

	Business licence	
Article number	**Description/features**	**Price in €**
345954	**CESentry Business licence** Licence for the administration of 1 CESentry master key system with up to 100 IDs. This licence allows the use of the CES admin and access app free of charge. Can be extended in blocks of 100 IDs to a maximum of 2000 IDs Licence term 36 months	**495,00**
345955	**Extension for Business licence** Extension of CESentry Business licence by a further 100 Ids Licence term 36 months	**95,00**
	Business licence renewal	
345956	**Renewal of Business licence** Renews CESentry Business licence after 36 months have elapsed	**495,00** **plus extensions**
	The CESentry Business licence can be extended to up to 1000 IDs and has a validity period of 36 months. *The licence must be renewed at the end of the 36-month period.* *Renewal of the licence always involves renewal of both the Business licence itself and any existing licence extensions.* *If only Business licence 345954 is renewed, this includes 100 IDs. The cost of renewal in this case is €495.00.* *However, if Business licence 345954 is renewed for a total of 200 IDs, the cost of renewal will be €495.00 plus €95.00 for the existing licence extension. Renewal of a Business licence with 1000 IDs costs €1350.00.* *Definitive for the date of renewal of the licence including all licence extensions is the start date of the term of the Business licence.* *If a Business licence is purchased on 1 July 2024, renewal will be due on 30 June 2027.* *If this Business licence is expanded by 100 IDs on, 1 January 2026, for example, renewal of both the licence and the licence extension will also be due on 30 June 2027.*	

CESentry Starter-Set

Lock electronically, profit practically

Quickly installed
Installing a CESentry locking cylinder is very simple: the system is battery-powered, the design of the electronic cylinder complies with that of a mechanical cylinder - simply remove the mechanical cylinder, install the electronic cylinder, and you're done.

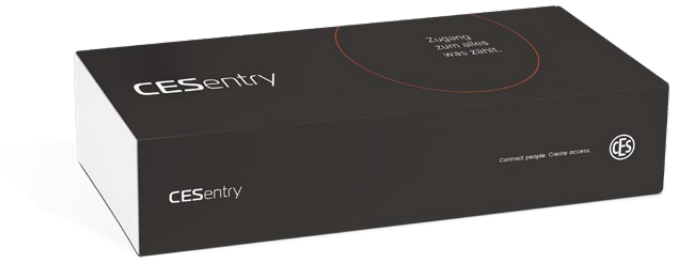

Convenient programming
For the programming the locking cylinder, you only need a smartphone. Authorizations can be easily assigned via the admin app.



Opening doors the easy way
Using a smartphone or locking medium doors can be opened very easily.

Expandable at any time
Would you like to make your home or office accessible to even more people? New authorizations or locking devices can be added at any time with CESentry.

Starter sets

	Starter sets	
Article number	**Description/features**	**Price in €**
EBSTART	**Electronic cylinder starter set,** double knob cylinder, CESentry version, reading on one side, basic length: : 30,5 mm / 30,5 mm (K/S), incl. 1x RFID key fob, incl. Basic licence for up to 20 IDs; incl. mounting tool	350,00
EBSTART2	**Electronic cylinder starter set,** half cylinder, CESentry version, reading on exterior side only, basic length: 30,5 mm (S), incl. 1x RFID key fob, incl. Basic licence for up to 20 IDs; incl. mounting tool	350,00

For length table see page 46

Tools

	Tools	
Article number	Description/features	Price in €
346206	Mounting key for electronic knob	30,00
349129	Compact shield removal tool	30,00

Electronic handle replacement parts

	Electronic handle replacement parts	
Article number	Description/features	Price in €
96067	Battery AA LR6 1.5V; PU = 8 pieces	35,00
349051	Reader cover, compact shield	7,50
349056	Battery holder, access side, narrow shield	7,50
349057	Battery holder, access side, wide shield	7,50
349083	Countersunk M4 washers; PU = 20 pieces	20,00
349088F	Threaded bolts, M4 wide; PU = 10 pieces	20,00
349089F	Threaded bolts, M5 wide; PU = 10 pieces	25,00
349097	Euro battery holder, reverse side, narrow shield	7,50
349098	Euro battery holder, reverse side, wide shield	7,50
349104	Adapter, short shield mounting, narrow shield	25,00
L4042	Srew battery compartment, PU= 20 pieces	7,50
349105	Square spindle; PU = 5 pieces	25,00
349105/0014	Square spindle, 9 mm, PU=5 pieces	25,00
349105/0027	Square spindle, 10 mm, PU=5 pieces	25,00
349150	Lever handle FSB1076, shape L	45,00
349150	Lever handle FSB1070, shape U	45,00
349150	Lever handle FSB1070G shape U, elbowed	115,00
349150	Lever handle FSB1053 Ulmer	60,00
349150	Lever handle FSB1053G Ulmer, elbowed	115,00
349113	Handle electronics	270,00

Electronic cylinder replacement parts

	Electronic cylinder replacement parts	
Article number	Description/features	Price in €
346052	Locking mechanism	105,00
346053	Locking cam for EB815	65,00
346054	Locking cam for EB8710	80,00
346057	Electronic knob LEGIC and MIFARE	250,00
346058	Locking cam for EB615	105,00
346059	Locking cam for EB6710	105,00
346161	Mechanical knob EB, aluminium	60,00
346067	Mechanical knob EB, brass	60,00
346068	Locking cam for EB815/41	65,00
346069	Locking cam for EB815/39	55,00
346201V	Electronic knob sleeve, PU = 8 pieces	140,00
346115	Shaft extension, PU = 10 pieces	15,00
346121	Mechanical knob shaft for EB815	85,00
346123V	Replacement seal, PU = 10 pieces	25,00
346126F	Electronic cylinder housing for EB815	60,00
346127F	Electronic cylinder housing for EB8710	60,00
346128F	Electronic cylinder housing for EB851	60,00
346129F	Electronic cylinder housing for EB815/AP	170,00
346130	Electronic cylinder housing for 615	115,00
346131F	Electronic cylinder housing for EB6710	115,00
346132F	Electronic cylinder housing for EB651	115,00
346133F	Electronic cylinder housing for EB615/AP	225,00
346144	Electronic cylinder housing for EB5746	60,00
346145	Adapter for EB5746, PU = 10 pieces	70,00
346155	Electronic cylinder housing for EB5999	60,00
346162	Battery CR123A, PU = 5 pieces	45,00
346199	Circlip, PU = 20 pieces	25,00

Electronic cylinder replacement parts

	Electronic cylinder replacement parts	
Article number	Description/features	Price in €
	Replacement electronic cylinder EB815	215,00
	Replacement electronic cylinder EB851	215,00
	Replacement electronic cylinder EB8710	255,00
	Replacement electronic cylinder EB802	215,00
	Replacement electronic cylinder EB815/AP	395,00
	Replacement electronic cylinder EB802/AP	395,00
	Replacement electronic cylinder EB615	270,00
	Replacement electronic cylinder EB651	270,00
	Replacement electronic cylinder EB6710	310,00
	Replacement electronic cylinder EB602	270,00
	Replacement electronic cylinder EB615/AP	450,00
	Replacement electronic cylinder EB602/AP	450,00
	Replacement electronic cylinder EB215	325,00
	Replacement electronic cylinder EB5558	305,00
	Replacement electronic cylinder EB5746	215,00
	Replacement electronic cylinder EB5999	215,00

* Cylinder assembly without knobs

Special function



Special function	Description of function	EB815	EB851	EB8710	EB802	
.../3	Mechanical knob shaft with Allen key				+	
.../14	With triangular shaft for fire service, M4/M6/M10				+	
.../30	Mechanical knob shaft with coin slot				+	
.../33	Locking cam, radius 13.5 mm	+	+	+	+	
.../34	Mechanical knob shaft with square spindle, internal				+	
.../35	One M6 thread on rear, bottom		+			
.../39	BIFFAR double locking cam	+	+	+	+	
.../41	10-tooth pinion, Ø 24 mm	+	+	+	+	
.../42	Locking cam, ABUS star	+	+	+	+	
.../46	Mechanical square shaft, 6 or 8 mm	+				
.../51	Two M4 threads on rear		+			
.../60	Internal mechanical knob with slip clutch	+				
.../97	1 mm shortened cylinder housing for door profiles with core bore hole	+	+	+	+	
.../102	Turning lever		+			
.../104	Short side 7.5 mm		+			
.../112	Locking cam, radius 10.8 mm	+	+	+	+	
.../113	One M4 thread on rear, bottom		+			
.../120	Mechanical knob shaft with M4 threaded hole	+				
.../121	Mechanical knob shaft with flat milled groove 60°, 7 mm	+				
.../123	Side fixing hole	+	+	+	+	
.../124	One M5 thread on rear, bottom		+			
.../127	For glass doors, with short inner side	+			+	
.../130	Mechanical knob shaft Ø 8 mm	+				
.../131	Mechanical knob shaft Ø 7.9 mm	+				
.../132	Mechanical square shaft, 8.2 mm	+				
.../133	Locking cam, radius 13.1 mm, width 5.2 mm	+	+	+	+	
.../137	Mechanical square shaft 6 or 8 mm, length 85 mm	+				
.../139	Mechanical knob shaft Ø 6 mm, length 11.8 mm	+				
.../142	Locking cam, radius 11.3 mm, width 4.3 mm	+	+	+	+	
.../143	Mechanical knob shaft with 8 mm internal square spindle				+	
.../158	Mechanical square shaft, 5 mm	+				
.../160	18-tooth pinion, Ø 30 mm	+	+	+	+	
.../163	Radius 13.5 mm, width 4.5 mm	+	+	+	+	
.../167	Mechanical knob shaft with flat driver pin, can be cut to length, width 7.5 mm	+	+			
.../176	Mechanical knob shaft Ø 7 mm	+				
.../182	Mechanical knob shaft Ø 7 mm, without hole	+				

	EB810	EB815/AP	EB802/AP	EB615	EB651	EB6710	EB602	EB610	EB615/AP	EB602/AP	EB715	EB751	EB7710	EB702	EB710	EB715/AP	EB702/AP	Surcharge
			+				+			+				+			+	22,00
			+				+			+				+			+	22,00
			+				+			+				+			+	22,00
	+	+	+	+	+	+	+	+	+	+	+	+	+	+	+	+	+	65,00
			+				+			+				+			+	22,00
					+							+						22,00
	+	+	+	+	+	+	+	+	+	+	+	+	+	+	+	+	+	65,00
	+	+	+	+	+	+	+	+	+	+	+	+	+	+	+	+	+	65,00
	+	+	+	+	+	+	+	+	+	+	+	+	+	+	+	+	+	130,00
		+		+					+		+					+		130,00
					+							+						22,00
		+		+					+		+					+		65,00
	+	+	+	+	+	+	+	+	+	+	+	+	+	+	+	+	+	22,00
					+							+						130,00
					+							+						65,00
	+	+	+	+	+	+	+	+	+	+	+	+	+	+	+	+	+	65,00
					+							+						22,00
		+		+					+		+					+		22,00
		+		+					+		+					+		130,00
	+	+	+	+	+	+	+	+	+	+	+	+	+	+	+	+	+	22,00
					+							+						22,00
				+			+				+			+				130,00
		+		+					+		+					+		130,00
		+		+					+		+					+		130,00
		+		+					+		+					+		22,00
	+	+	+	+	+	+	+	+	+	+	+	+	+	+	+	+	+	65,00
		+		+					+		+					+		22,00
		+		+					+		+					+		22,00
	+	+	+	+	+	+	+	+	+	+	+	+	+	+	+	+	+	130,00
			+				+			+				+			+	22,00
		+		+					+		+					+		22,00
	+	+	+	+	+	+	+	+	+	+	+	+	+	+	+	+	+	130,00
	+	+	+	+	+	+	+	+	+	+	+	+	+	+	+	+	+	130,00
		+		+	+				+		+	+				+		22,00
		+		+					+		+					+		22,00
		+		+					+		+					+		22,00

Extensions

Length A (K, internal)	Length B (S, external)	Overall length	Surcharges
30,5	30,5	61	0,00
30,5	35,5	66	10,00
30,5	40,5	71	20,00
30,5	45,5	76	30,00
30,5	50,5	81	40,00
30,5	55,5	86	50,00
30,5	60,5	91	60,00
30,5	65,5	96	70,00
30,5	70,5	101	80,00
30,5	75,5	106	90,00
30,5	80,5	111	100,00
35,5	35,5	71	20,00
35,5	40,5	76	30,00
35,5	45,5	81	40,00
35,5	50,5	86	50,00
35,5	55,5	91	60,00
35,5	60,5	96	70,00
35,5	65,5	101	80,00
35,5	70,5	106	90,00
35,5	75,5	111	100,00
35,5	80,5	116	220,00
40,5	40,5	81	40,00
40,5	45,5	86	50,00
40,5	50,5	91	60,00
40,5	55,5	96	70,00
40,5	60,5	101	80,00
40,5	65,5	106	90,00
40,5	70,5	111	100,00
40,5	75,5	116	220,00
40,5	80,5	121	240,00
45,5	45,5	91	60,00
45,5	50,5	96	70,00
45,5	55,5	101	80,00
45,5	60,5	106	90,00

Length A (K, internal)	Length B (S, external)	Overall length	Surcharges
45,5	65,5	111	100,00
45,5	70,5	116	220,00
45,5	75,5	121	240,00
45,5	80,5	126	260,00
50,5	50,5	101	80,00
50,5	55,5	106	90,00
50,5	60,5	111	100,00
50,5	65,5	116	220,00
50,5	70,5	121	240,00
50,5	75,5	126	260,00
50,5	80,5	131	280,00
55,5	55,5	111	100,00
55,5	60,5	116	220,00
55,5	65,5	121	240,00
55,5	70,5	126	260,00
55,5	75,5	131	280,00
55,5	80,5	136	300,00
60,5	60,5	121	240,00
60,5	65,5	126	260,00
60,5	70,5	131	280,00
60,5	75,5	136	300,00
60,5	80,5	141	320,00
65,5	65,5	131	280,00
65,5	70,5	136	300,00
65,5	75,5	141	320,00
65,5	80,5	146	340,00
70,5	70,5	141	320,00
70,5	75,5	146	340,00
70,5	80,5	151	360,00
75,5	75,5	151	360,00
75,5	80,5	156	380,00
80,5	80,5	161	400,00
Other lengths on request			

Finishes

Finish no.	Finish abbreviation	Designation	Surcharge Electronic handle set	Surcharge Electronic cylinder
Standard		stainless steel	**0,00**	**0,00**
Standard		black	**0,00**	**0,00**
01	MMVG	Nickel-plated dull	**On request**	**0,00**
02	MMGB	Brass brushed	**On request**	**12,00**
03	MPOL	Brass polished	**On request**	**12,00**
04	MMCR	Chrome-plated velours	**On request**	**12,00**
05	MPCR	Chrome-plated polished	**On request**	**12,00**
06	MPV	Nickel-plated polished	**On request**	**12,00**
07	MBR	Brass bronze	**On request**	**65,00**
08	MALT	Brass smooth antique	**On request**	**65,00**
15	MBRD	Dark brown coloured	**On request**	**65,00**
16	MBRH	Light brown coloured	**On request**	**65,00**
17	MANT	Brass brushed antique	**On request**	**65,00**
18	KANT	Brass copper antique	**On request**	**65,00**
20	MVGE	Nickel-plated dull protective	**On request**	**12,00**
31	MMVB	Nickel-plated brushed	**On request**	**0,00**
33	MGCR	Brushed chrome plated	**On request**	**12,00**
49	MGV	Nickel-plated velours	**On request**	**12,00**

Knob shapes

Form	Code	Description
	A	A knob
	CR	CR knob
	CT	CT knob
	EB	EB knob
	EH	EH knob
	E	E knob
	ES	ES knob

Form	Code	Description
	ET	ET knob
	F	F knob
	FL	FL knob
	HH	HH knob
	H	H knob
	J	J knob
	S	S knob

Options
Finishes and knobs

Price category 1	Price category 2	Price category3
12,00€	22,00€	65,00€

Finish code		Knob type	Knob code		Price category
MMVG	+	H	H/NF	=	Standard
			H/NG	=	Standard
		CT	UKNG	=	2
		ET	ETNG	=	2
		CR	CRNG	=	1
		E	E/NF	=	2
		A	A/NF	=	2
		S	S/NG	=	2
		HH	HHNF	=	2
		ES	ESNF	=	2
		EH	EHNF	=	2
MMVB	+	H	H/NG	=	Standard
		CT	UKNG	=	2
		ET	ETNG	=	2
		CR	CRNG	=	1
		E	E/NG	=	2
		A	A/NG	=	2
		S	S/NG	=	2
MMGB	+	H	H/MG	=	1
		CT	UKMG	=	2
		ET	ETMG	=	2
		CR	CRMG	=	1
MPOL	+	H	H/MP	=	1
		CT	UKMP	=	2
		ET	ETMP	=	2
		CR	CRMP	=	1
MPOU	+	H	H/MU	=	1
		CT	UKMU	=	2
		ET	ETMU	=	2
		CR	CRMU	=	1
MESN	+	H	H/MN	=	2
		CT	UKMN	=	2
		ET	ETMN	=	2
		CR	CRMN	=	2

Finish code		Knob type	Knob code		Price category
MMCR	+	H	H/MC	=	2
		CT	UKMC	=	2
		ET	ETMC	=	2
		CR	CRMC	=	2
MPCR	+	H	H/PC	=	2
		CT	UKPC	=	2
		ET	ETPC	=	2
		CR	CRPC	=	2
MGCR	+	H	H/CG	=	2
		CT	UKCG	=	2
		CR	CRCG	=	2
MPV	+	H	H/PV	=	1
		CT	UKPV	=	2
		ET	ETPV	=	2
M_SS	+	H	H/EF	=	1
		H	H/NI	=	2
		CT	UKEF	=	2
		ET	ETEF	=	2
		EB	EBEF	=	Standard
		CR	CREF	=	1
		S	S/EF	=	2
MGV	+	H	H/MV	=	1
		CT	UKMV	=	2
		ET	ETMV	=	2
		CR	CRMV	=	1
MGVE	+	H	H/GE	=	1
MALT	+	H	H/AD	=	2
		CT	UKAD	=	2
		ET	ETAD	=	2
		CR	CRAD	=	2
MANT	+	H	HMAN	=	2
		CT	UKMA	=	2
		CR	CRMA	=	2
MBRH	+	H	H/BH	=	2
		CT	UKBH	=	2
		ET	ETBH	=	2



Options
Finishes and knobs

Price category 1	Price category 2	Price category3
12,00€	22,00€	65,00€

Finish code		Knob type	Knob code		Price category
MBR	+	H	H/BÜ	=	2
		CT	UKBÜ	=	2
		CR	CRBÜ	=	2
MBRD	+	H	H/BD	=	2
		CT	UKBD	=	2
		ET	ETBD	=	2
		CR	CRBD	=	2
MMSW	+	H	H/SG	=	2
		CT	UKSW	=	2
		ET	ETSW	=	2
		CR	CRSG	=	2
F79	+	H	H/79	=	2
		CT	UK79	=	2
		ET	ET79	=	2
		CR	CR79	=	2
KANT	+	H	H/KAN	=	2
		CT	UKKA	=	2
C500	+	H	H/WL	=	2
		CT	UKWL	=	2
		ET	ETWL	=	2
		CR	CRWL	=	2
		E	E/WL	=	2
C502	+	H	H/WL	=	2
		CT	UKWL	=	2
		ET	ETWL	=	2
		CR	CRWL	=	2
		E	E/WL	=	2
C506	+	H	H/WL	=	2
		CT	UKWL	=	2
		ET	ETWL	=	2
		CR	CRWL	=	2
		E	E/WL	=	2

Finish code		Knob type	Knob code		Price category
C520	+	CT	UKBB	=	2
		ET	ETBB	=	2
		CR	CRBB	=	2
C640	+	H	H/64	=	2
		CT	UK64	=	2
		ET	ET64	=	2
		CR	CR64	=	2
		E	E/64	=	2
C642	+	H	H/64	=	2
		CT	UK64	=	2
		ET	ET64	=	2
		CR	CR64	=	2
		E	E/64	=	2
C650	+	H	H/65	=	2
		CT	UK65	=	2
		ET	ET65	=	2
		CR	CR65	=	2
		E	E/65	=	2
		A	A/65	=	2
C652	+	H	H/65	=	2
		CT	UK65	=	2
		ET	ET65	=	2
		CR	CR65	=	2
		E	E/65	=	2
		A	A/65	=	2
C660	+	H	H/66	=	2
		CT	UK66	=	2
		ET	ET66	=	2
C662	+	H	H/66	=	2
		CT	UK66	=	2
		ET	ET66	=	2



Options
Finishes and knobs

Price category 1	Price category 2	Price category3
12,00€	22,00€	65,00€

Finish code		Knob type	Knob code		Price category
C670	+	H	H/67	=	2
		CT	UK67	=	2
		ET	ET67	=	2
		CR	CR67	=	2
C672	+	H	H/67	=	2
		CT	UK67	=	2
		ET	ET67	=	2
		CR	CR67	=	2
C680	+	H	H/68	=	2
		CT	UK68	=	2
		ET	ET68	=	2
		CR	CR68	=	2
C682	+	H	H/68	=	2
		CT	UK68	=	2
		ET	ET68	=	2
		CR	CR68	=	2
C690	+	H	H/69	=	2
		CT	UK69	=	2
		ET	ET69	=	2
		EB	EB69	=	Standard
		CR	CR69	=	2
		E	E/69	=	2
C692	+	H	H/69	=	2
		CT	UK69	=	2
		ET	ET69	=	2
		CR	CR69	=	2
		E	E/69	=	2



Lever handle shapes

Form	Code	Description	Surcharge
	FSB1070	Handle shape FSB 1070 ‘U-shape’, suitable for EN179	15,00
	FSB1076	Lever handle shape FSB 1076 ‘L-shape’	without surcharge
	FSB1053	Handle shape FSB 1053 ‘Ulmer Klinke’, suitable for EN179	40,00
	FSB1053G	Handle shape FSB 1053G ‘Ulmer Klinke, elbowed’, suitable for EN179	110,00
	FSB1070G	Handle shape FSB 1070 ‘U-shape, elbowed’, suitable for EN179	110,00
	FSB1244	Lever handle shape FSB 1244	On request
	FSB1245	Lever handle shape FSB 1245	On request
	FSB1245G	Lever handle shape FSB 1245, elbowed	On request
	FSB1267	Lever handle shape FSB 1267	On request
	FSB1004	Lever handle shape FSB 1004	On request

Further FSB lever handle shapes on request

	Services	
Article number	**Description/features**	**Net-Price in Euro**
D001	**Electronic locking plan** Generation of the electronic locking plan and the customer database including access authorization times at the Velbert plant. All relevant data must be supplied by the customer in a table.	on request
D002	**Device programming** Programming of the electronic devices at the Velbert plant based on the user specifications. Per locking device	16,50
D003	**Media programming** Programming of the electronic media (card, key, key fob) at the Velbert plant based on the user specifications Per key/medium	3,30
D011	**Special numbering of locking media** Laser identification based on the customers specification and prior feasibility study, customer data must be available as graphics file or in tabular format, depending on the application. Per locking medium	6,00
D005	**Working time** One hour corresponds to 6 units of work, per unit of work	20,00
D006	**Travelling expenses** Per driven kilometre	1,50
D007	**Travelling time** One hour corresponds to 6 units of work, price per unit of work	20,00
D008	**Special hardware/software solutions** Special adaptation of devices/interfaces and special functions	on request

	Services	
Article number	**Description/features**	**Net-Price in Euro**
D009	**Project planning and design** Project planning of mechatronic systems by CES system engineers Scope: - One coordination meeting with site supervision or craftsmen (electricians, fitters, fire safety officers, etc.) Planning will be based on the documents (building plans, room plans) to be supplied by the customer. - Preparation of a specification documentation Any unforeseeable additional services that are due to customer-specific adaptations, interruptions and waiting times as a consequence of delays on the customer's side (e.g. non-appearance of craftsmen) will be charged extra at the stated rates (D005...D007). Per day, incl. travelling expenses	**1.195,00**
D104	**Specifications/documentation** Creation of a system-specific set of specifications based on the customer requirements. Contents: - One-time coordination meeting with the construction managers or craftsmen (electricians, joiners, fire protection officers etc.) To be based on documents (construction plans, room plans) that are to be supplied by the customer - Creation of specification documentation Additional unforeseeable services arising from customer-specific adjustments, interruptions and waiting times caused by delays on the construction site (e.g. by craftsmen failing to turn up) will be charged for separately according to effort and expenditure (D005–D007).	**on request**
D010	**Commissioning** Commissioning of mechatronic systems by CES system engineers. Scope: Commissioning of the locking devices already fitted by the customer according to CES specifications. Prerequisites: Locking devices are fitted at the place of installation, any wiring that may be required has been laid up to the locking devices according to CES specifications and is clearly marked. Any additional unforeseeable services resulting from customer-specific adaptation, improper preparation, interruptions and delays on the customer's side (e.g. non-appearance of craftsmen, unmarked wiring, etc.) will be charged extra at the sated rates (D005...D007). Per day, incl. travelling expenses	**1.195,00**

C.Ed. Schulte GmbH
Zylinderschlossfabrik
Friedrichstraße 243
D-42551 Velbert
✆ +49 2051 204 0
✉ info@ces.eu

www.ces.eu

Subject to technical changes without notice · EN · V13 · 11.26