334SL

Contract business lock for apartment entrance doors
and public buildings

Designation/features

prepared for profile cylinders
With reversible latchbolt
Backset 55 (60, 65, 70, 80) mm
Centre distance 72 mm
Fixed follower 8 (9), mounted in zinc-plated steel rings
Forend 20 x 235 mm for rebated doors, or 24 x 235 mm for flush doors edged or rounded, satin stainless steel
Latchbolt and deadbolt made of steel, nickel-plated

Classification

DIN 18251-1	Class 3

Variants

390SL	WC/BATHROOM – version with 8mm deadbolt follower
	Centre distance 78 mm
	Latchbolt and deadbolt (1-throw, 15mm) made of steel, nickel-plated
310SL	Warded lock with 1 key, no reversible latchbolt

Article No.
334SL

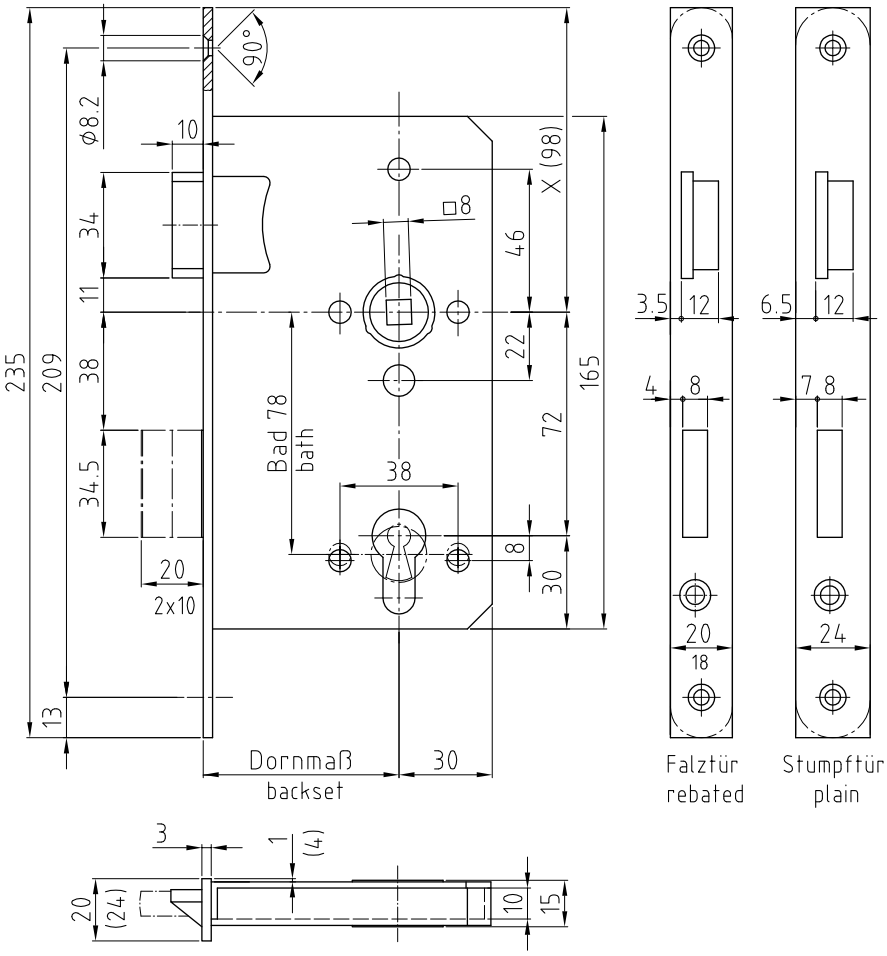

Subject to technical modifications. Status as of: 04/18